ISO 9001 2015 CERTIFIED | SNI | JIS K-6742

PiPAMAS

KATALOG PRODUK

Pipa pvc berkualitas untuk memenuhi standard kebutuhan instalasi pipa pada berbagai sektor pembangunan di Indonesia

PT Pipamas Primasejati
Head office : Jl. Soekarno Hatta No. 409 Bandung, Jawa Barat
Telp. 022-522 8811 / 022-522 7799
marketing@pipamaspvc.com

Pipamas Abu uPVC			
Class	Diameter Nominal	Outside Diameter	Wall Thickness
AW	½	22 mm	2.4 mm
	¾	26 mm	2.5 mm
	1	32 mm	2.6 mm
	1¼	42 mm	2.7 mm
	1½	48 mm	3.10 mm
	2	60 mm	3.50 mm
	2½	76 mm	3.60 mm
	3	89 mm	4.50 mm
	4	114 mm	5.20 mm
	5	140 mm	5.70 mm
	6	165 mm	7.50 mm
	8	216 mm	9.00 mm
	10	267 mm	9.60 mm
	12	318 mm	12.0 mm
D	1¼	42 mm	1.30 mm
	1½	48 mm	1.60 mm
	2	60 mm	1.70 mm
	2½	76 mm	2.00 mm
	3	89 mm	2.50 mm
	4	114 mm	2.70 mm
	5	140 mm	3.60 mm
	6	165 mm	3.70 mm
	8	216 mm	5.00 mm
	10	267 mm	7.00 mm
	12	318 mm	8.00 mm
C	⅝	17 mm	0.80 mm
	½	22 mm	1.10 mm
	¾	26 mm	1.40 mm
	1	32 mm	1.40 mm
	2	60 mm	1.40 mm
	2½	76 mm	1.40 mm
	3	89 mm	1.40 mm
	4	114 mm	1.40 mm

Pipamas Putih uPVC			
Class	Diameter Nominal	Outside Diameter	Wall Thickness
AW	½	22 mm	1.60 mm
	¾	26 mm	1.90 mm
	1	32 mm	2.00 mm
	1¼	42 mm	2.20 mm
	1½	48 mm	2.30 mm
	2	60 mm	2.40 mm
	2½	76 mm	2.60 mm
	3	89 mm	3.15 mm
	4	114 mm	4.10 mm
	5	140 mm	5.50 mm
	6	165 mm	6.50 mm
	8	216 mm	7.70 mm
	10	267 mm	9.60 mm
	12	318 mm	12.00 mm
D	1¼	42 mm	1.30 mm
	1½	48 mm	1.40 mm
	2	60 mm	1.50 mm
	2½	76 mm	1.60 mm
	3	89 mm	1.70 mm
	4	114 mm	2.20 mm
	5	140 mm	2.70 mm
	6	165 mm	3.20 mm
	8	216 mm	4.20 mm
	10	267 mm	5.40 mm
	12	318 mm	6.50 mm
C	⅝	17 mm	0.80 mm
	½	22 mm	1.10 mm
	¾	26 mm	1.40 mm
	1	32 mm	1.40 mm
	2	60 mm	1.40 mm
	2½	76 mm	1.40 mm
	3	89 mm	1.40 mm
	4	114 mm	1.40 mm

Toleransi ketebalan pipa (±) 10%

FITTING KELAS AW

AW Elbow

Ukuran			
½	¾	1	1¼

AW Tee

Ukuran			
½	¾	1	1¼
1½	2	2½	

AW Socket

Ukuran		
½	¾	1

AW Reducer Socket

Ukuran		
¾ x ½	1 x ½	1 x ¾

AW Valve Socket

Ukuran			
½	¾	1	1¼

AW Faucet Socket

Ukuran			
½	¾	1	1¼

AW Faucet Elbow

Ukuran
½

AW Faucet Tee

Ukuran
½

AW R-Valve Socket

Ukuran	
1 x ½	1 x ¾

AW Cap

Ukuran		
½	¾	1

Union Socket

Ukuran
¾

Water Moor

Ukuran			
½	¾	1	1 x ¾

Elbow

Ukuran			
1½	2	2½	3

Spear Valve Socket

Ukuran
1¼

FITTING KELAS D

D Reducer Socket

Ukuran	
3x2	4x3

D Cap/Dop

Ukuran			
2	2½	3	4

D Elbow

Ukuran			
1½	2	2½	3
3t	4	5	6

D Tee

Ukuran		
1½	2	2½
3	4	5

D Elbow 45°

Ukuran	
3	4

D Tee Y 90°

Ukuran	
3	4

D Tee Y 45°

Ukuran	
3	4

BALL VALVE

Ukuran (inch)
½
¾
1
1¼
1½
2

uPVC ADHESIVE

Lem Tangit
Can 400gr
Tube 40gr

FLOOR DRAIN 18 GRILLE

Varian Warna
Grey
White

PIPAMAS RAIN GUTTER

GUTTER 140
Talang Air Kotak

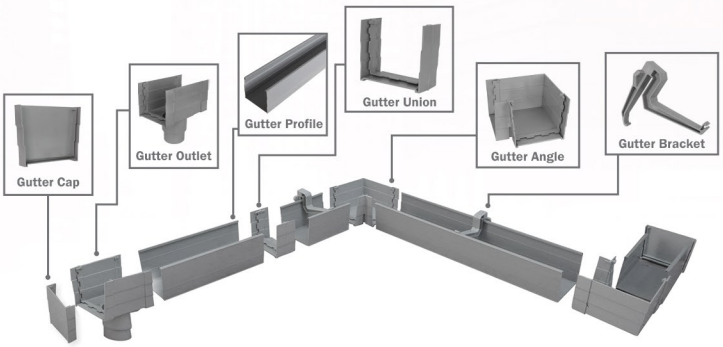

GUTTER R6
Talang Air Bulat

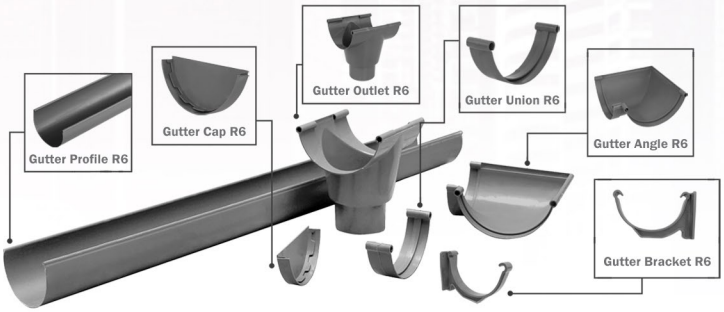

Pipamas HDPE SNI

Ukuran		Panjang	PN-20	PN-16	PN-12.5	PN-10	PN-8 (Panjang 6)	PN-6.3 (Panjang 6)
mm	inch							
20	½	250 m	2.3 mm	2.0 mm	*1.9 mm	*1.8 mm	-	-
25	¾	250 m	3.0 mm	2.3 mm	2.2 mm	*2.0 mm	-	-
32	1	250 m	3.5 mm	3.0 mm	2.4 mm	2.2 mm	-	-
40	1¼	100 m	4.4 mm	3.7 mm	3.0 mm	2.4 mm	-	-
50	1½	100 m	5.5 mm	4.6 mm	3.7 mm	3.0 mm	-	-
63	2	100 m	6.9 mm	5.8 mm	4.7 mm	3.8 mm	3.0 mm	-
75	2½	50 m	8.6 mm	6.8 mm	5.6 mm	4.5 mm	3.6 mm	-
90	3	50 m	10.3 mm	8.2 mm	6.7 mm	5.4 mm	4.3 mm	3.5 mm
110	4	6 m	12.3 mm	10.0 mm	8.1 mm	6.6 mm	5.3 mm	4.2 mm
125	5	6 m	15.1 mm	11.4 mm	9.2 mm	7.4 mm	6.0 mm	4.8 mm
160	6	6 m	17.1 mm	14.6 mm	11.8 mm	9.5 mm	7.7 mm	6.2 mm

Fitting HDPE Mechanical Joint

Reinforced Clamp Saddle

Male Threaded Adaptor

Equal Bend

Equal Tee

End Cap

Female Bend

Female Threaded Adaptor

Reducing Tee

Straight Coupler

Male Tee

Male Bend

Female Tee

Reducing Coupler

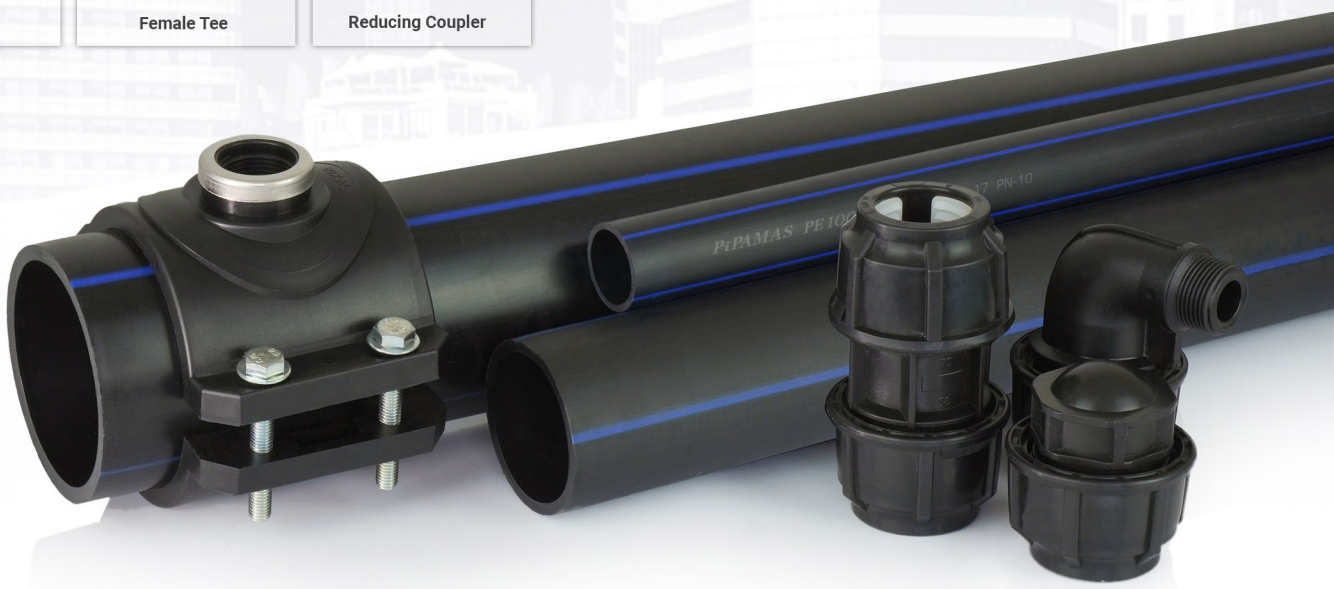

Spesifikasi dengan tanda (*) mengacu pada standard PiPAMAS

SPESIFIKASI PIPAMAS SNI RRJ & SCJ

Nominal Outside Diameter (inch)	Nominal Diameter (mm)	Wall Thickness (mm)			
		S-8	S-10	S-12.5	S-16
½	20	*1.2	*1.0	*0.8	-
¾	25	1.5	*1.2	*1.0	-
1	32	1.9	1.6	*1.3	-
1¼	40	2.4	1.9	1.6	-
1½	50	3.0	2.4	2.0	1.6
2	63	3.8	3.0	2.4	2.0
2½	75	4.5	3.6	2.9	2.3
3	90	5.4	4.3	3.5	2.8
4	110	6.6	5.3	4.2	3.4
6	160	9.5	7.7	6.2	4.9
8	200	11.9	9.6	7.7	6.2
10	250	14.8	11.9	9.9	7.7
12	315	18.7	15.0	12.1	9.7

Pipamas SNI **S-8**

Instalasi saluran air bertekanan **16 bar**

Pipamas SNI **S-10**

Instalasi saluran air bertekanan **12.5 bar**

Pipamas SNI **S-12.5**

Instalasi saluran air bertekanan **10 bar**

Pipamas SNI **S-16**

Instalasi saluran air bertekanan **8 bar**

Rubber Ring Joint

Solvent Cement Joint

Spesifikasi dengan tanda (*) mengacu pada standard PiPAMAS

SPESIFIKASI PIPAMAS DRAINAGE RRJ & SCJ

Class	Nominal Diameter	Outside Diameter	Wall Thickness	Panjang (Meter)
Class A	3	90	1.8	6
Class B	1¼	40	3.2	6
	1½	50	3.2	6
	2	63	3.2	6
	3	90	3.2	6
	4	110	3.2	6
	6	160	4.0	6
	8	200	4.9	6
	10	250	6.2	6
	12	315	7.7	6

Rubber Ring Joint

Solvent Cement Joint

PIPAMAS CONDUIT

Conduit White	Diameter	Panjang
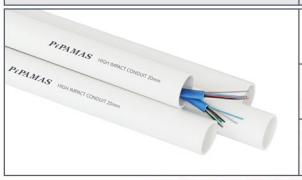	16 mm	2.9 meter
	20 mm	2.9 meter
	25 mm	2.9 meter

Conduit Black	Diameter	Panjang
	16 mm	2.9 meter
	20 mm	2.9 meter
	25 mm	2.9 meter

Saddle Clip			
White Kabel Listrik	Red Kabel Fire Alarm	Green Kabel Elektronik	Blue Kabel Telepon

Four Way Box	Coupler	Tee Way Box

ISO 9001:2015, SNI 06-0084-2002, JIS K-6742, SNI 4829.2:2015, Uji Kelayakan Air Minum, Green Label Indonesia